INSTALLATION MANUAL:

COR-4500522 / 4500420

Jeep Wrangler Adjustable Front Track Bar with Drop Bracket
(1997-2006, TJ/LJ)

CLAYTON
OFF ROAD

INCLUDED ITEMS

4500522 Jeep Wrangler Adjustable Front Track Bar with Drop Bracket – (1997-2006, TJ/LJ)			
QTY	Part Number	Description	Class/Grade
1	4500200	Adjustable Front Track Bar	N/A
1	4500420	TJ/LJ Track Bar Drop Bracket	N/A
3	18947	9/16"-18 x 3" Yellow Zinc Finish SAE J429 Hex Cap Screw	Grade 8
6	33818	9/16" Yellow Zinc Finish SAE Flat Washer	Thru-Hardened
3	37310	9/16"-18 Zinc Finish Top Lock Nut	Grade C

Product Notes and Features:

- Track bar made from 1-3/8″ x 5/16″ DOM tubing for extra strength and unmatched durability
- 5/16″ thick lowered height double sheer track bar bracket
- Unique, self-aligning design that utilizes the original track bar mounting location
- GIIRO Joint at the axle and a greaseable, 2.5″ Forged Johnny Joint at the frame results in smooth, isolated noise and vibration
- Adjustable design allows for perfecting proper axle positioning for lifts ranging from 4-7 inches
- Provided larger than stock 9/16″-18 Grade 8 bolts and hardware for both the axle and frame connection to prevent track bar play and slop
- Drilling and welding are required for proper installation

DISCLAIMER

WARNING:

Suspension systems and their components are designed to enhance your vehicle's off-road performance. This may cause your vehicle to handle differently, on and off-road. Always wear your seatbelt and take extra care when driving a modified vehicle. Failure to do so can result in loss of control which may result in a rollover causing serious injury, or even death to the driver and/or passengers of the vehicle. Regular maintenance and consistent inspections are required to keep your modified vehicle safe and functioning properly. These suspension systems and any components should be installed by certified technicians only. Attempts to install these products without proper knowledge can lead to poor performance, or possible failure, which may jeopardize the safety of the vehicle and its passengers. The installer is responsible for proper installation ensuring a safe and properly functioning vehicle. Take extra care when operating a modified vehicle and thoroughly inspect your vehicle before and after every off-road use.

Read the instruction set in its entirety before attempting the installation.

NOTE:

This product may require general welding, fabrication, and automotive mechanic skills. Welding should only be done by a competent welder. Clayton Off Road implies no guarantees or warranties and is not liable for improper installation. Some grinding and fitment may be required when installing this product. Every vehicle varies slightly, and some fabrication and/or modification may be required.

ATTENTION:

It is the customer's responsibility to thoroughly inspect all received parts to ensure they are assembled correctly and fully welded. Please carefully examine all weld seams and verify that bolt-through holes are properly aligned. Some Clayton Off Road products are permanent, non-removable, weld-on solutions. **If a defect or issue is found after installation, especially with permanent weld-on components, it may be difficult or impossible to correct.** Inspecting the part(s) received beforehand helps prevent unnecessary and avoidable complications.

ATTENTION: TORQUE SPECIFICATION

When working on any vehicle, it is good practice to torque suspension/weight-bearing components while the vehicle is resting under its load. This instruction set, as well as any other Clayton Off Road instruction set, assumes the installer will tighten any suspension-related components properly, to the recommended torque specification, when the vehicle is resting safely under its own weight.

INSTALLATION INSTRUCTIONS

*****Take this product to a licensed professional if you are hesitant about the installation process!*****

The following instructions apply to the listed components below:

- Wrangler Adjustable Front Track Bar with Drop Bracket (1997-2006, TJ/LJ)

We strongly recommend having basic mechanic's hand tools, sockets, wrenches, vehicle jacks and stands, and other common tools readily available. Installing an aftermarket lift kit is a detailed process, and having the right tools on hand will ensure a smoother installation.

As always, feel free to contact us anytime during your installation – you can count on us to help!

COR-4500522

4500522 Installation Tools Required:

- 17mm socket/wrench
- 3/4, 13/16, 7/8" socket/wrench
- 9/16" drill bit and drill
- Adjustable wrench or a 1-1/2" wrench
- Cut-off wheel and/or flap disk
- Welder
- Torque wrench
- Impact drill

TRACK BAR LENGTHS

Please refer to the table below for minimum and maximum track bar lengths for this product. These lengths are recommendations and should only serve as limits for axle positioning and dialing in axle track. **The following measurements are given as "eye-to-eye" lengths (center-to-center of joints).**

Please note that your exact track bar length will vary by lift height. You will need to adjust the track bar based off of where the axle sits under the vehicle. Please take care and have patience when aligning the axle track.

Table 1: COR-4500200 Minimum and Maximum Track Bar Lengths

COR Number / Product Name	Minimum	Maximum
4500200 Wrangler Adjustable Front Track Bar	31 - $\frac{1}{8}$"	32 - $\frac{3}{16}$"

INSTALLATION INSTRUCTIONS

*****Take this product to a licensed professional if you are hesitant about the installation process!*****

1. The installation may be completed with the vehicle on the ground. There is no need to remove the wheels and tires.

Remove the original track bar at both the axle and the frame. The axle-side mount is located under the spring perch. The original bolt can be removed using a 17mm socket, however, your bolt may be different. There is a flag nut on the opposite side of the track bar mount that will hold the nut as you remove the bolt. If the bolt is seized and you cannot get it loose, you may cut the bolt. Upgraded hardware, as well as a new flag nut, are supplied.

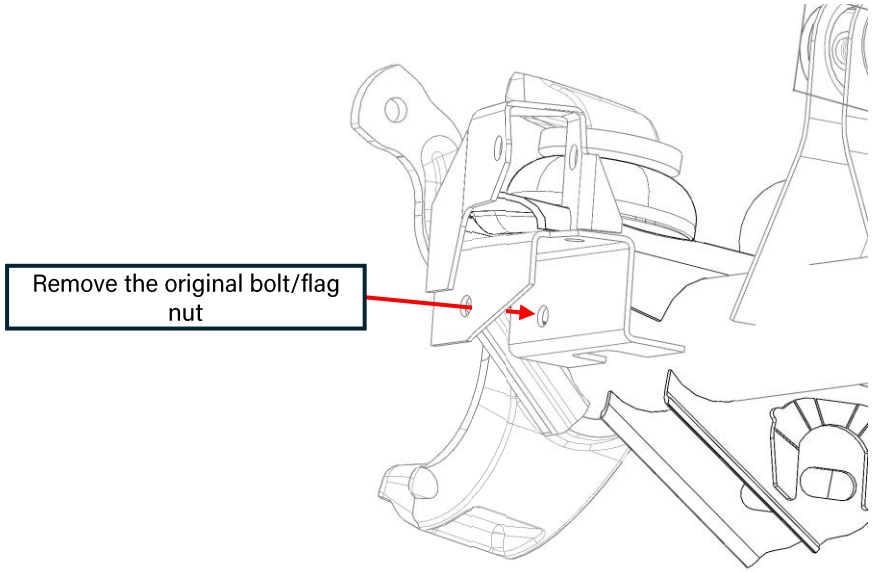

TJ axle-end track bar mount (bolt removed)

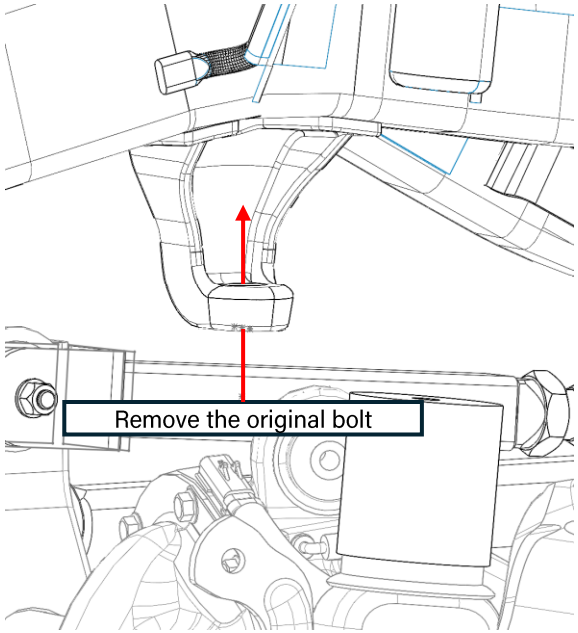

TJ frame-end track bar mount (bolt removed)

INSTALLATION INSTRUCTIONS

*****Take this product to a licensed professional if you are hesitant about the installation process!*****

2. With the front track bar completely removed, drill out the front axle track bar mount to 9/16" diameter. This will allow the upgraded, 9/16" hardware to pass through the original mount location.

Now, on the frame-side, bring the bracket up to the original track bar mount, and feed the welded bolt through. Tighten down the provided lock nut with a ¾" socket/wrench, ensuring that the bracket's notched support sits flush against the frame. Grind and prep the frame area for welding.

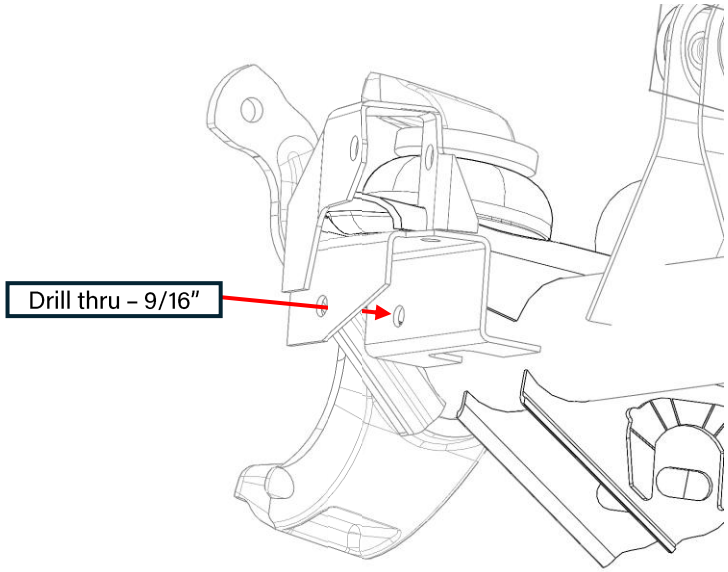

TJ axle-side track bar mount drilled out

TJ frame-side drop bracket installed

INSTALLATION INSTRUCTIONS

3. With the weld area prepped, you may weld the bracket onto the frame at the notched tab and the contact point of the original track bar mount. See the photo below referencing where to weld. **Weld entirely around the notched frame tab.**

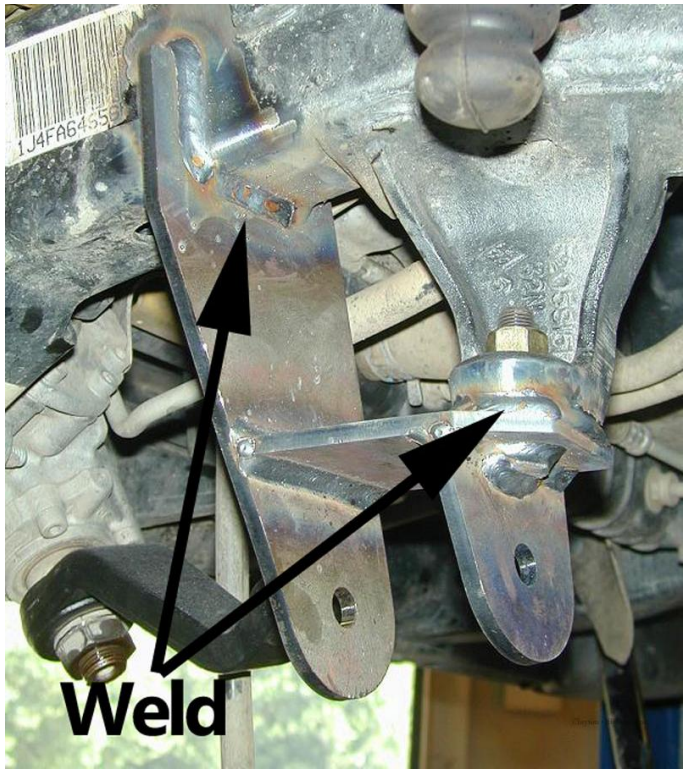

TJ frame-side drop bracket weld locations

INSTALLATION INSTRUCTIONS

4. Determine the appropriate length of the new track bar based on your vehicle's ride height and your desired axle track. You can measure the length of the original track bar as a starting point.

Adjust the end-forging by screwing it in or out. **Measure the length from eye-to-eye, or center of bushing to center of bushing.** When the desired length is met, spin the jam nut down to the control arm to lock the foraging into position.

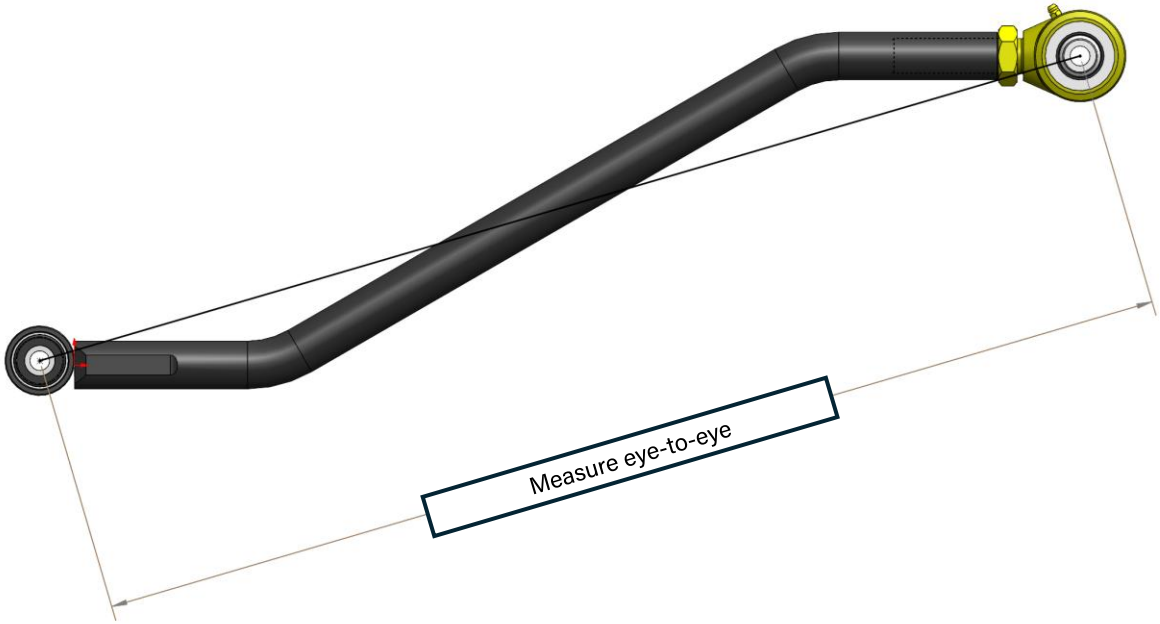

INSTALLATION INSTRUCTIONS

5. With the track bar adjusted to an ideal length, install the track bar with the adjuster end at the drop bracket (frame-end). Use the supplied 9/16"-18 bolt and hardware. Use a 13/16" and 7/8" wrench. Tighten, **but do not torque yet.**

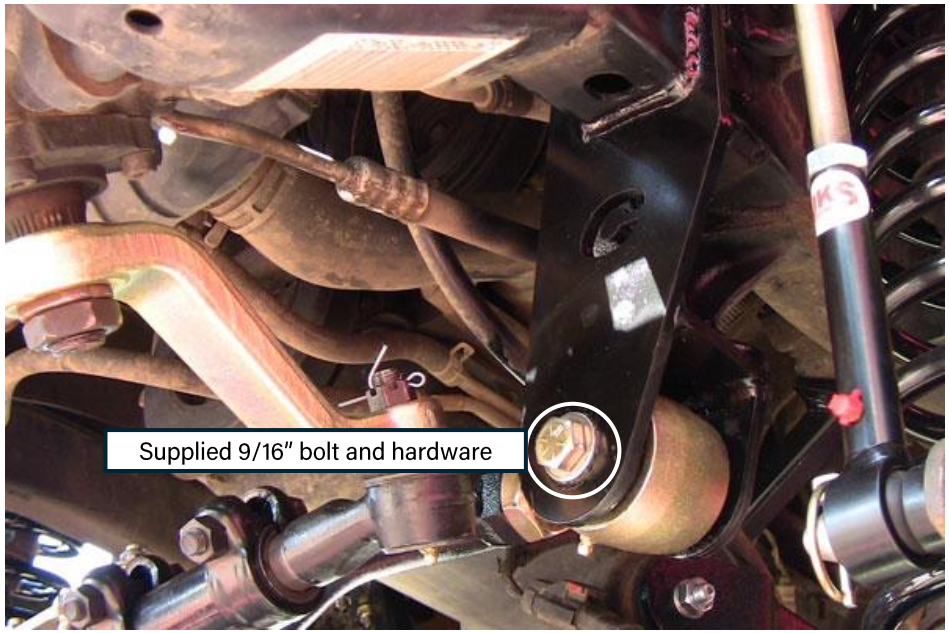

Drop bracket welded and painted, with track bar installed

INSTALLATION INSTRUCTIONS

6. Loosely install the non-adjustable end of the track bar into the mount on the axle. Use the provided 9/16" bolt and hardware, and a 13/16" wrench with the provided flag-nut. <u>If you purchased the drop bracket and track bar together, you will have an extra 9/16"-18 bolt, as well as spare hardware.</u>

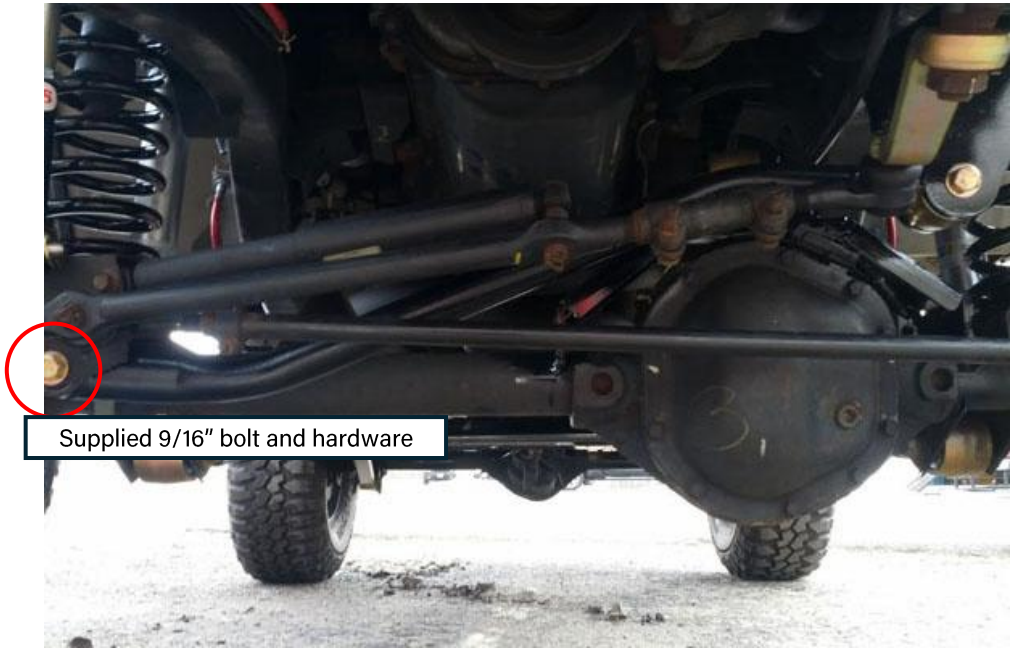

TJ Drop bracket and track bar fully installed

INSTALLATION INSTRUCTIONS

7. With the vehicle on the ground, torque both track bar bolts to 110 lb-ft. Also, confirm that the alignment bolt at the original track bar location is tight with the provided washer and hardware.

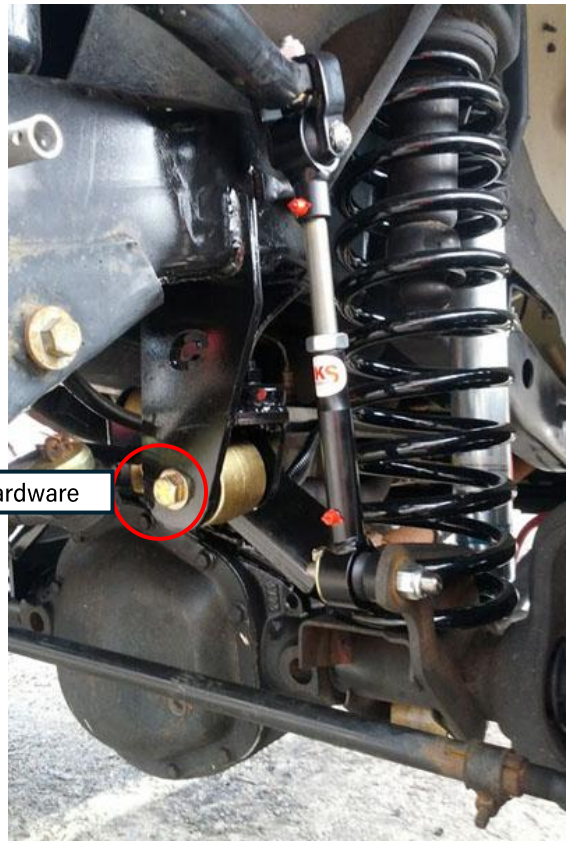

TJ Drop bracket and track bar is fully installed and painted

INSTALLATION INSTRUCTIONS

8. Tighten down the jam nut on the track bar. Use a 1-1/2" wrench or an adjustable wrench for the jam nut. Use a breaker bar to gain additional leverage. Tighten all jam nuts down as tight as humanly possible.

Please note that not all wrenches are created with the same tolerances. If your wrenches are too loose around the jam nut, Clayton Off Road offers tight, wrap-around wrenches for purchase. Please search for the wrenches using the SKU's below.

COR Wrench-ends for control arm jam nuts (COR-2500125, COR-2500100)

INSTALLATION INSTRUCTIONS

9. The installation is now complete. Please follow the post-installation checklist below before driving your vehicle.

POST-INSTALLATION CHECKLIST:

- ❑ Front track bar bolts torqued to 110 lb-ft (frame-side and axle-side)
- ❑ Lug nuts are torqued to the manufacturer's specification (if removed)
- ❑ Jam nuts are jammed down as tight as possible
- ❑ The drop bracket is properly aligned and welded to the frame
- ❑ The alignment bolt and nut on the drop bracket are tightened down
- ❑ A professional properly aligns the vehicle for adjusting your axle track

CLAYTON OFF ROAD